SPACECRAFT PROPULSION

PPS®X00

[Stationary plasma thruster]

- Designed for constellations
- Design to cost approach

SAFRAN

fiche pps X00.indd 1 11/09/19 16:21

PPS®X00

Features

Wide power range: 200 to 1,000 W
High total impulse & reliability level
Design optimized to ensure high production rate

Design to cost

The PPS®X00 plasma thruster (Hall effect) takes benefit of Safran Spacecraft Propulsion's long experience with electric propulsion to propose a very efficient product. To ensure high production rate, the architecture of the thruster has been optimized with a significant reduction of the number of parts and special processes. It is designed to handle small satellite orbit raising and station-keeping.

Very high performance

The major advantages of the PPS®X00 are its high life time capability for this power range and its excellent thrust-to-electrical power ratio, which enable reducing operating time or the number of thrusters needed. Several innovations have been incorporated in the discharge chamber and magnetic circuit designs to propose competitive and reliable solutions while keeping a high performance level. It can be delivered as part of an electric propulsion subsystem, including Power Processing Unit and Propellant Management System.

How it works

Thrust is generated by the high-speed ejection of xenon ions. The ions are accelerated by an electrical field obtained by the magnetic containment of electrons: the Hall effect. The ejected ions are neutralized to avoid transferring an electrical charge to the satellite.

Development in progress

The PPS®X00 development has passed the preliminary design review and is on route towards a critical design review. This important milestone validated the general architecture and retained key technologies. Several prototype and engineering models (EM) have been designed, manufactured and tested confirming the technical, cost and production ability aspects.
Industrialization is also in progress to allow the delivery of the flight hardware in 2021.

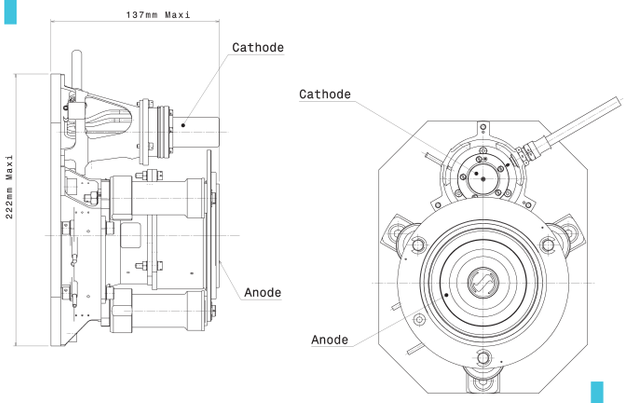

SPECIFICATIONS

Nominal power (W)	200 - 1,000
Fuel	Xenon (compatible with Krypton)
Thrust (mN)	15 - 75
Specific impulse (s)	1,300 - 1,650
Total impulse (MN.s) / Throughput (kg)	min. 1.0 / min. 79
Number of cycles	11,000
Discharge current (A)	0.7 to 3.3
Efficiency (%)	48
Power supply voltage (V)	250 to 350
Weight (kg)	< 3.2